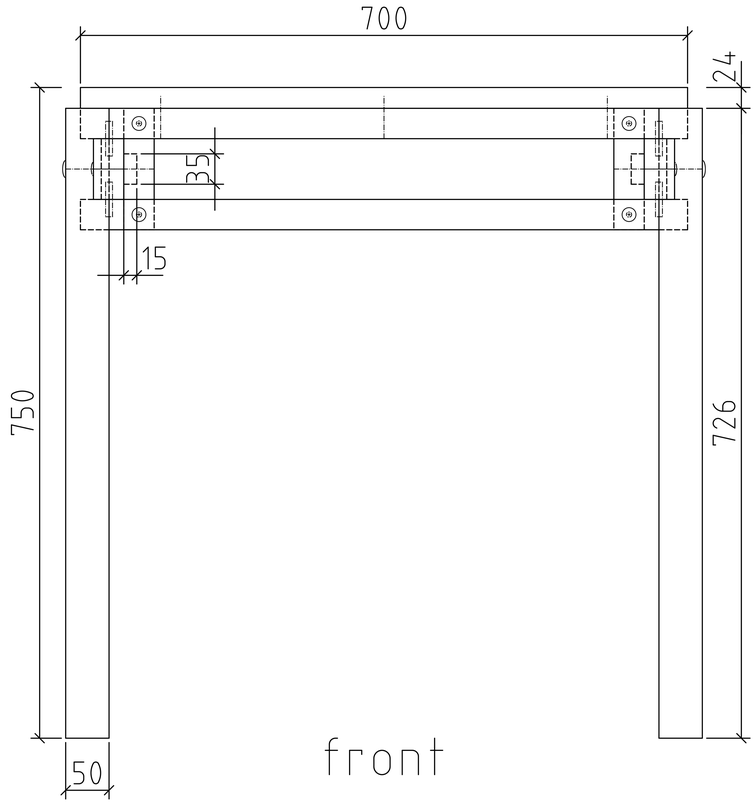

front

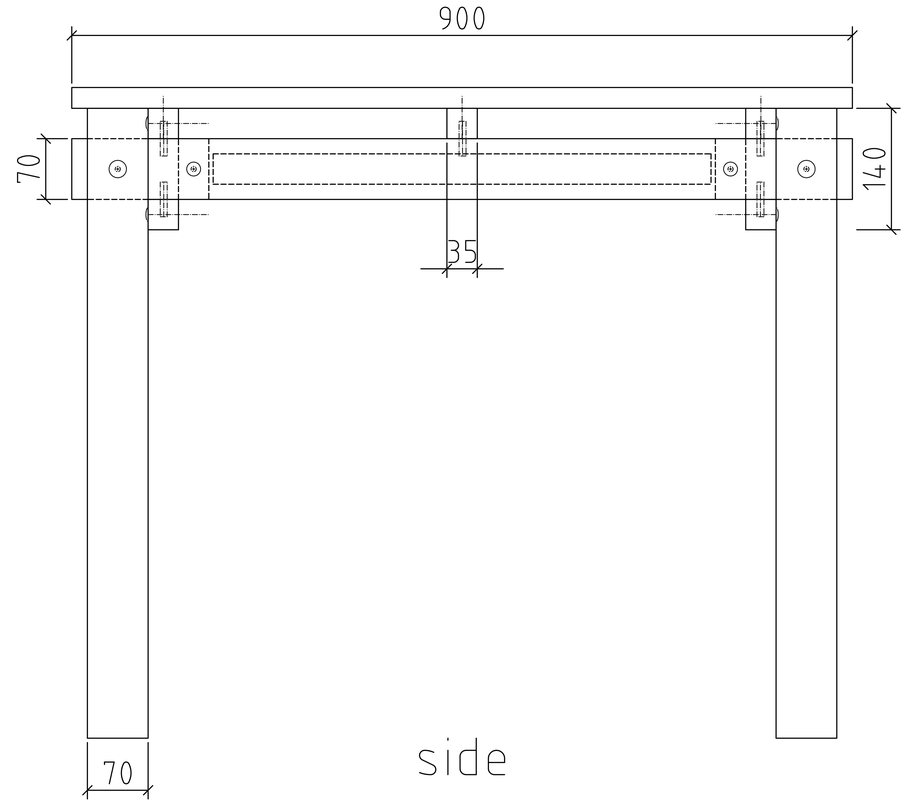

side

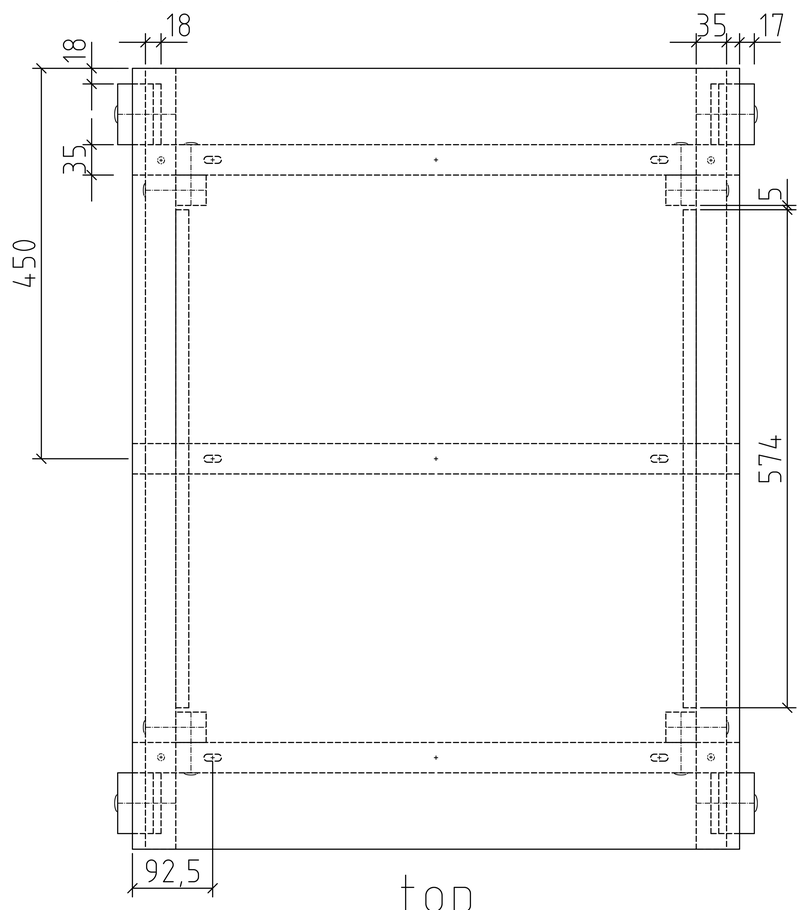

top

Rentveld table
scale: 1:10
outer dimensions: 900 x 734 x 750